PREMIER COLLECTIONS

REZA'S ROKKAKU

assembly instructions

EAGLE OF PARADOX / LIZARD

Assembly:

Assemble Center Spine and slide through Bottom Velcro Sleeve Pocket and into Top Pocket. Close Bottom Velcro Sleeve Pocket tightly to tension Sail. Assemble both Cross Struts and slide through Upper and Lower Cross Strut Velcro Sleeve Pockets respectively. Tighten and close Velcro Sleeve Pockets on both Cross Struts. Tie Center Spine to Cross Struts at two Tie-Down Points using attached Ribbon Ties.

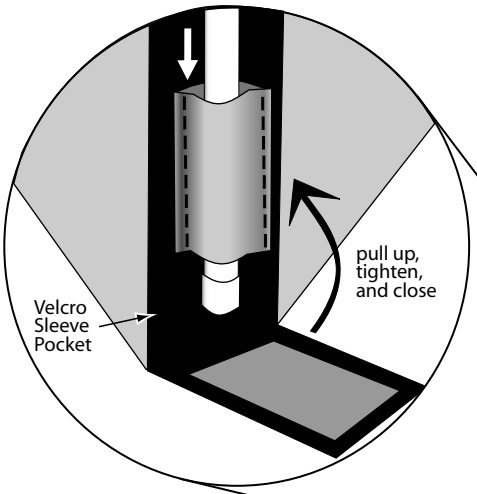

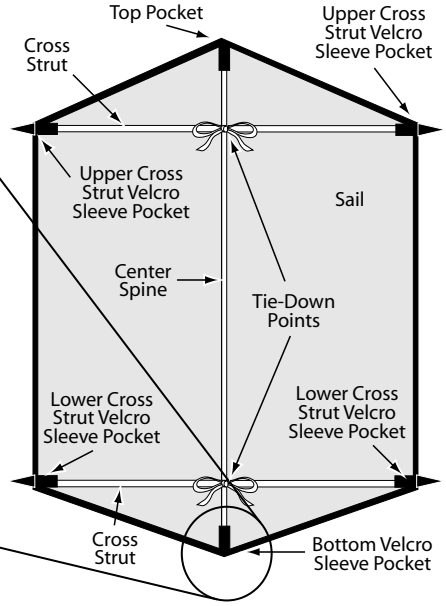

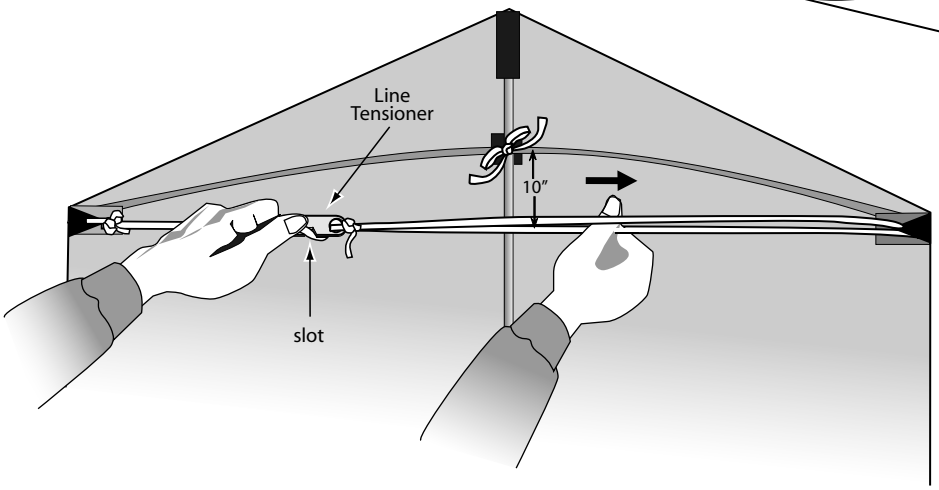

Tensioning:

Hold Line Tensioner with left hand and pull Line through Line Tensioner with right hand as shown in diagram until kite starts to bow. Slide Line Tensioner into place to achieve approximately a 10" bow at center. Once in place, make sure Line is "locked" into slot on Line Tensioner. Bow both Cross Struts to approximately the same curvature.

To De-Tension: Hold Line Tensioner with left hand and one of the Lines on right side of kite with right hand and simply slide Line Tensioner back until bow begins to straighten and Line goes slack.

FLIGHT INSTRUCTIONS:

Note: Your Rokkaku's bridle has been "daisy-chain" knotted for shipping purposes. Unknot chain and make sure that bridle is completely free from tangles before launch.

-Tie flying line to Tow Loop.
-Have a friend stand about 75 ft. downwind from you and hold the kite with its head pointed towards the sky.
-As the wind catches the kite, signal your friend to release it while you bring in the line with long steady pulls.
-Slowly let out more line as the kite flies upward.

RECOMMENDED LINE: 250 LB TEST LINE

OPTIMUM WIND CONDITIONS FOR REZA'S ROKKAKU

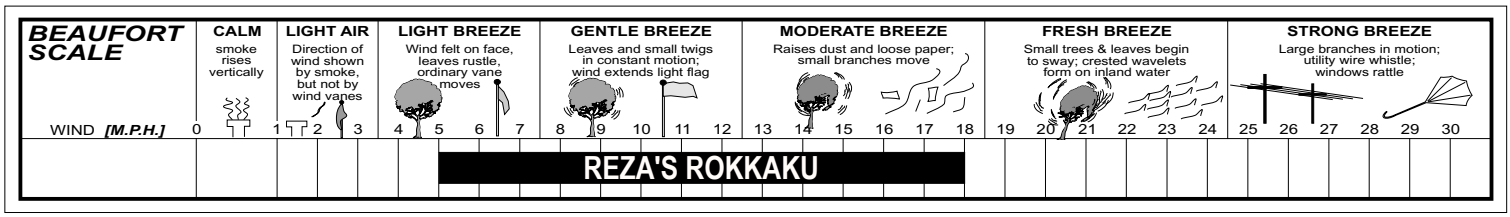

Note: Wind conditions aloft may vary considerably from those found near ground level.